FIRST ANGLE PROJECTION

(ALL DIMENSIONS ARE IN mm)

DRAWING NO. 3 460 00 50 349

THIS INFORMATION ON THE DOCUMENT IS THE PROPERTY OF BHARAT HEAVY ELECTRICALS LIMITED.
IT MUST NOT BE USED DIRECTLY OR INDIRECTLY IN ANY WAY DETRIMENTAL TO THE INTEREST OF THE COMPANY.

REF. DRG. NO. POW313747. DWG

SIGN & DATE

INVENTORY NO.

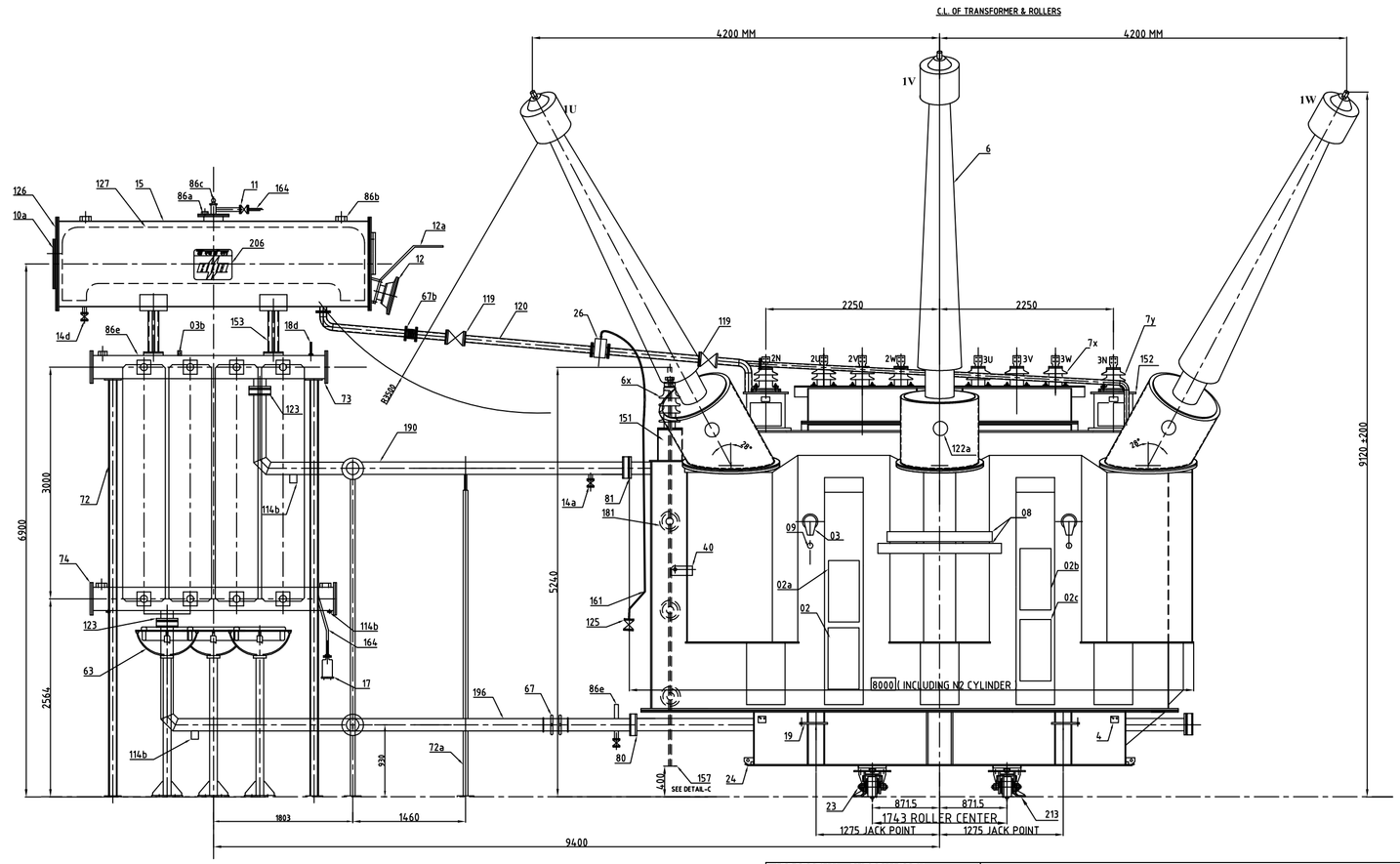

ADDITIONAL INFORMATION W.O. 71289A19800	TYPE OF PRODUCT OR NAME OF CUSTOMER/PROJECT	84 MVA 400/6.9-6.9 KV 3-PHASE ONAN/ONAF COOLED STATION TRANSFORMER M/S:- TSGENCO (4X270 MW MANUGURU TPS)					
STATUS OF DRAWING U	BHARAT HEAVY ELECTRICALS LTD. JHANSI	DRN MSC	NAME	SIGN	DATE	NO. OF VAR	
DISTRIBUTION OF PRINTS TRE-1, TRP-1, BAY1&2-2, BAY9-4,		CHD				–	
		APPD RKM			02.11.15		
REV 01 / DATE 30.03.16 / ALTERED / CHECKED	DEPT TRE CODE 406	GRADE OF UN TOL DIM BWMT	SCALE --	WEIGHT (KG) –	REF. TO ASSY. NO.	ITEM NO –	NO. OF ITEM –
PHASE-PHASE DIMENSION CORRECTED AS 4200 MM. OGA PART LIST ADDED AT PAGE 4.	TITLE OGA ELEVATION VIEW			CARD CODE	DRAWING NO. 3 460 00 50 349		REV. 01
					SHEET NO. 01	NO. OF SHEETS 04	

SIZE A3

FIRST ANGLE PROJECTION

(ALL DIMENSIONS ARE IN mm)

DRAWING NO. 3 460 00 50 349

THIS INFORMATION ON THE DOCUMENT IS THE PROPERTY OF BHARAT HEAVY ELECTRICALS LIMITED.
IT MUST NOT BE USED DIRECTLY OR INDIRECTLY IN ANY WAY DETRIMENTAL TO THE INTEREST OF THE COMPANY.

REF. DRG. NO. POW313747. DWG

SIGN & DATE

INVENTORY NO.

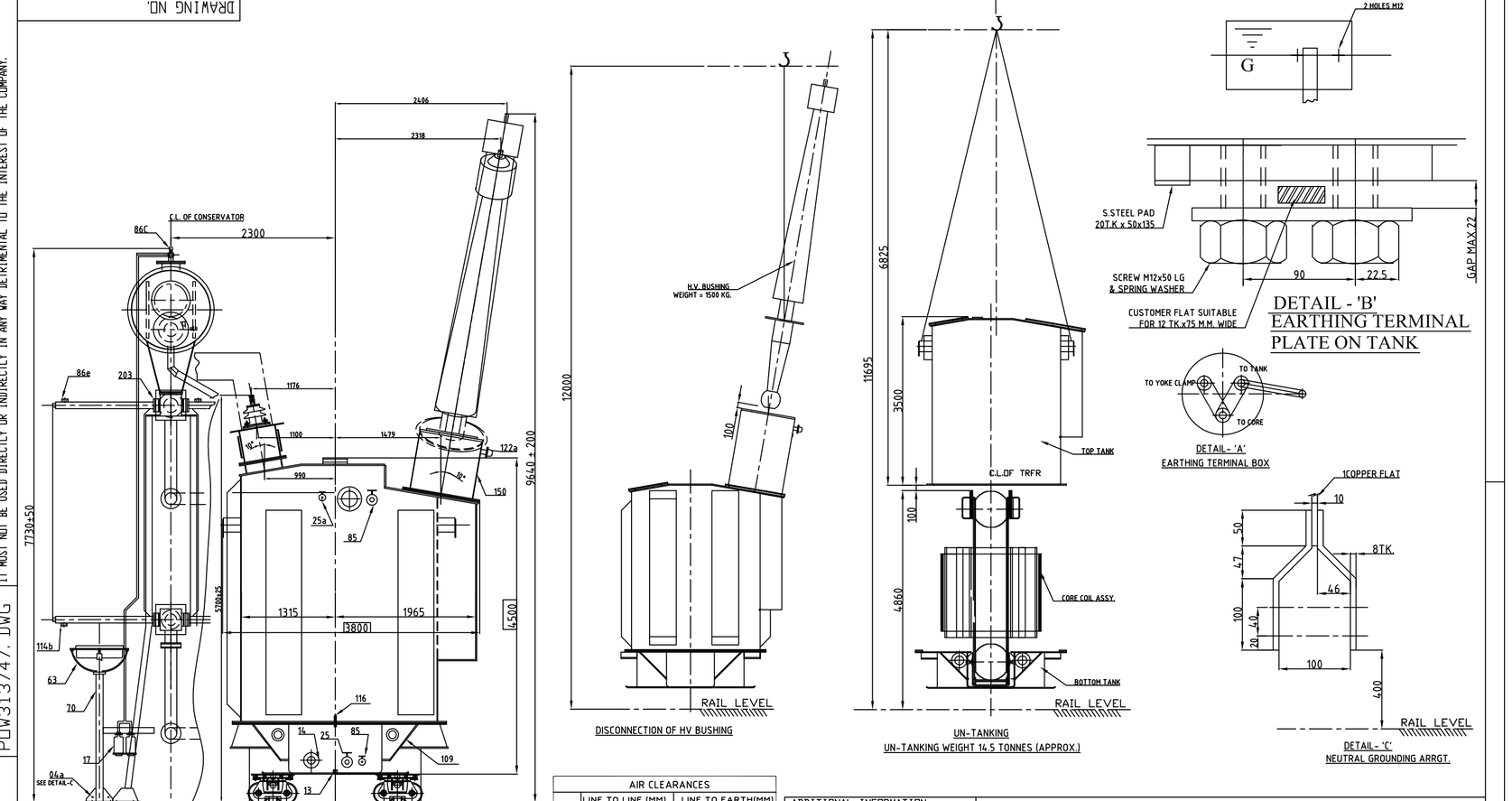

AIR CLEARANCES		
	LINE TO LINE (MM)	LINE TO EARTH(MM)
HV	4200	3500
LV1	280	140
LV2	280	140

ADDITIONAL INFORMATION W.O. 71289A19800	TYPE OF PRODUCT OR NAME OF CUSTOMER/PROJECT	84 MVA 400/6.9-6.9 KV 3-PHASE ONAN/ONAF COOLED STATION TRANSFORMER M/S:- TSGENCO (4X270 MW MANUGURU TPS)					
STATUS OF DRAWING U	BHARAT HEAVY ELECTRICALS LTD. JHANSI	DRN MSC	NAME	SIGN	DATE	NO. OF VAR	
DISTRIBUTION OF PRINTS TRE-1, TRP-1, BAY1&2-2, BAY9-4,		CHD				–	
		APPD RKM			02.11.15		
	DEPT TRE CODE 406	GRADE OF UN TOL DIM BWMT	SCALE --	WEIGHT (KG) –	REF. TO ASSY. NO.	ITEM NO –	NO. OF ITEM –
	TITLE OGA SIDE VIEW			CARD CODE	DRAWING NO. 3 460 00 50 349		REV. 01
					SHEET NO. 03	NO. OF SHEETS 04	

SIZE A3

FIRST ANGLE PROJECTION

(ALL DIMENSIONS ARE IN mm)

DRAWING NO. 3 460 00 50 349

THIS INFORMATION ON THE DOCUMENT IS THE PROPERTY OF BHARAT HEAVY ELECTRICALS LIMITED.
IT MUST NOT BE USED DIRECTLY OR INDIRECTLY IN ANY WAY DETRIMENTAL TO THE INTEREST OF THE COMPANY.

REF. DRG. NO. POW313747. DWG

SIGN & DATE

INVENTORY NO.

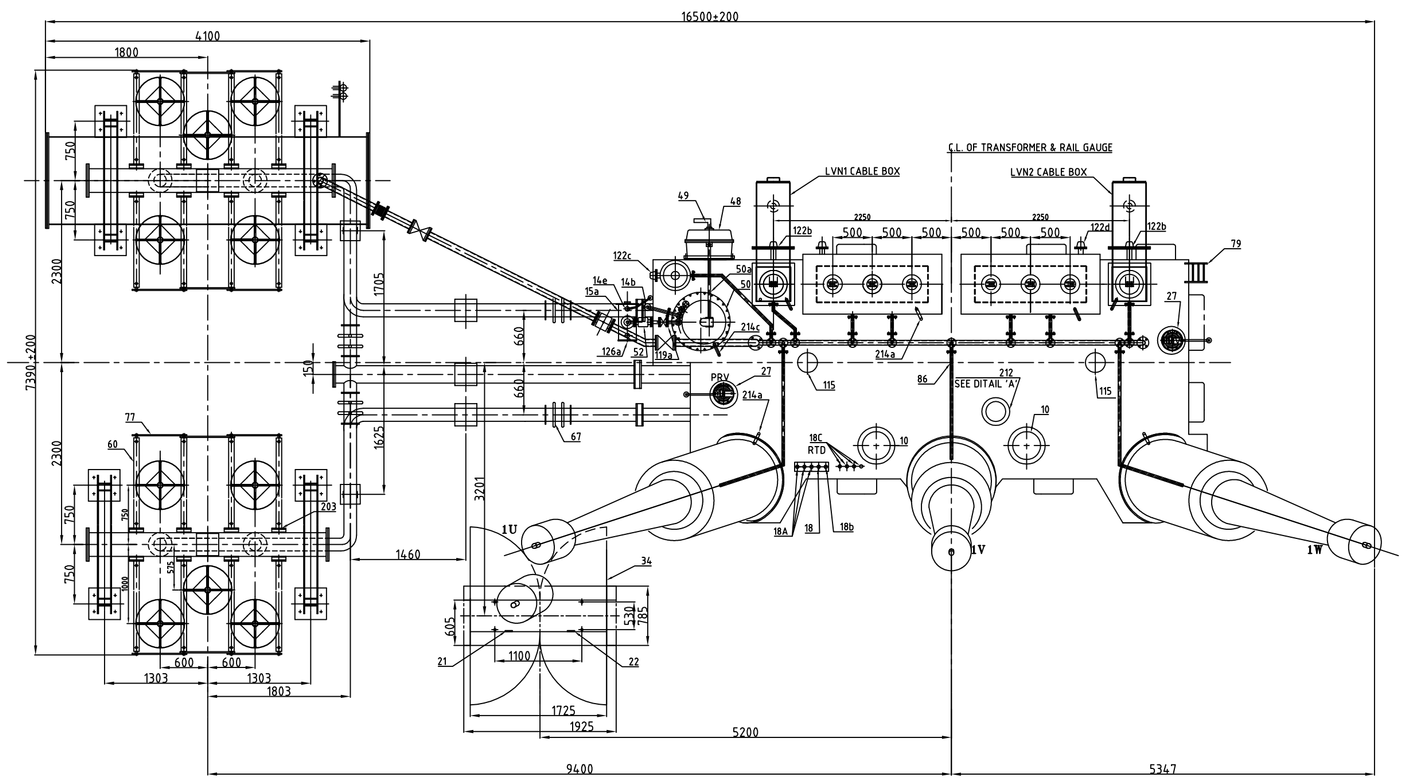

ADDITIONAL INFORMATION W.O. 71289A19800	TYPE OF PRODUCT OR NAME OF CUSTOMER/PROJECT	84 MVA 400/6.9-6.9 KV 3-PHASE ONAN/ONAF COOLED STATION TRANSFORMER M/S:- TSGENCO (4X270 MW MANUGURU TPS)					
STATUS OF DRAWING U	BHARAT HEAVY ELECTRICALS LTD. JHANSI	DRN MSC	NAME	SIGN	DATE	NO. OF VAR	
DISTRIBUTION OF PRINTS TRE-1, TRP-1, BAY1&2-2, BAY9-4,		CHD				–	
		APPD RKM			02.11.15		
	DEPT TRE CODE 406	GRADE OF UN TOL DIM BWMT	SCALE --	WEIGHT (KG) –	REF. TO ASSY. NO.	ITEM NO –	NO. OF ITEM –
	TITLE OGA PLAN VIEW			CARD CODE	DRAWING NO. 3 460 00 50 349		REV. 01
					SHEET NO. 02	NO. OF SHEETS 04	

SIZE A3

FIRST ANGLE PROJECTION

(ALL DIMENSIONS ARE IN mm)

DRAWING NO. 3 460 00 50 349

THIS INFORMATION ON THE DOCUMENT IS THE PROPERTY OF BHARAT HEAVY ELECTRICALS LIMITED.
IT MUST NOT BE USED DIRECTLY OR INDIRECTLY IN ANY WAY DETRIMENTAL TO THE INTEREST OF THE COMPANY.

REF. DRG. NO. POW313747. DWG

SIGN & DATE

INVENTORY NO.

REFERENCE DRGS.

1	O. G. A. (4 SHEETS)	3460050349
2	RATING AND DIAGRAM PLATE	3460195001 2
3	FOUNDATION PLAN	3460050356
4	VALVE SCHEDULE PLATE	3460195001 3
5	320 DIA TWIN BIDIRECTIONAL ROLLERS	3460050360
6	H. V. BUSHING	3460050357
7	L. V. & L. V. NEUTRAL BUSHING	3460050359
8	HV NEUTRAL BUSHING	3460050358
9	LV BUS DUCT MTG. ARRGT.	3460050364
10	LOADING GAUGE DIAGRAM	3460050361
11	GA OF MARSHALLING KIOSK	3460625028
12	DIAGRAM OF COOLER CONTROL GEAR	3460625029
13	SCHEMATIC DIAGRAM OF OLTC	3460625030

WEIGHT DETAILS OF TRANSFORMER

ITEM	APPROXIMATE WEIGHTS IN KG
CORE & WINDING	78000
TANK AND FITTINGS	24500
ROLLERS	1200
BUSHING	4500
MARSHALLING KIOSK + WIRING	1000
RADIATOR BANK (INCLUDING CONSERVATOR ASSY)	20500
OIL IN TRANSFORMER TANK & TURRET & BUSHING	50000
OIL IN RADIATOR BANK & CONSERVATORS & PIPEWORK	10000
TOTAL WEIGHT INCLDUING OIL	180000
SHIPPING WEIGHT OF TRANSFORMER GAS FILLED	98000
UNTANKING WEIGHT (TOP TANK ASSY)	15000

APPROXIMATE OIL QUANTITIES

DESCRIPTION	QUANTITY (LITRES)
OIL IN TANK INCLUDING TURRETS & BUSHINGS	50000
OIL IN RADIATOR BANK & CONSERVATORS & PIPEWORK	10000
TOTAL	60000

NOTES :-

1 WHEN REFERRING THE O. G. A. DRG. PLEASE QUOTE 84 MVA AND W. O. NO. 71289N19800.
2 DIMENSIONS SHOWN THUS [ ] ARE OVERALL SHIPPING DIMENSIONS.
3 WIRING FROM INSTRUMENTS CTs ETC. NOT SHOWN FOR CLARITY
4 JACK POINTS MARKED THUS ⊥ ARE UNLOADING FROM WAGON.
5 THE DESIGN FEATURES SHOWN ON THIS DRAWING (GENERALLY IN LINE WITH IS: 2026 / IEC 60076 & AGREED CUSTOMER SPECIFICATION) MEETS THE STATUTORY , REGULATORY AND SAFETY REQUIREMENTS WITH RESPECT TO EARTHING ARRGHT. DANGER AND OTHER LABLES , CLEARANCES IN AIR, PROVISION FOR PRESSURE RELIEF DEVICE, GAS & OIL ACTUATED RELAY AND ANTI-EARTHQUAKE CLAMPING ARRGHT.
6 FOUNDATION BOLTS, NUTS, HARDWARES / FASTENERS FOR EARTHING CONNECTIONS, PADS ETC. ARE SUPPLIED BY BHEL .
7 ROLLERS TO BE USED FOR TRANSPORTATION/INSTALLATION ARE ALSO IN SCOPE OF BHEL SUPPLY.
8 PAINT SHADE : 631 OF IS: 5 (EPOXY)
9 OIL SHALL BE INLINE WITH IS: 335.

122a	C. T TERMINAL BOX (HV)	3
122b	C. T. TERMINAL BOX L. V. N	2
122c	C. T. TERMINAL BOX H. V. N	1
122d	CT TERMINAL BOX LV	2
150	H. V TURRET	3
151	H. V NEUTRAL TURRET	1
152	L. V NEUTRAL TURRET	2
152a	LV TURRET	2
180	TERMINAL MARKING PLATE	12

ITEMS	CONSERVATOR AND ITS PIPEWORK	QTY
010a	INSPECTION END COVER FOR MAIN CONSERVATOR	1
011	ISOLATING GATE VALVE 25 NB FOR BREATHER	1
012	MAGNETIC OIL GAUGE WITH LOLA	1
012a	RAIN HOOD (FOR PRV, MOG, BUCHHOLZ RELAY)	4
014a	25 NB GATE VALVE DIVERTER	1
014d	DRAIN GATE VALVE 50 DIA MAIN CONSERVATOR	1
014e	DRAIN GATE VALVE 25 NB AUX. CONSERVATOR	1
015	OIL CONSERVATOR	1
015a	AUX. CONSERVATOR (300 DIA)	1
017	DEHYDRATING BREATHER FOR MAIN CONSERVATOR	1
17a	BREATHER ASSY. FOR AUX. CONSERVATOR	1
026	BUCHHOLZ RELAY	1
067b	EXPANSION JOINT 80 NB	1
086a	AIR RELEASE PLUG ON CONSERVATOR 1/4" BSP	1
086a	AIR RELEASE PLUG ON CONSERVATOR 3/4" BSP	2
086c	AIR PRESSURE GAUGE ON MAIN CONSERVATOR	1
119	ISOLATING BUTTERFLY VALVE FOR BUCHHOLZ RELAY 80 NB	2
119a	25 NB ISOLATING GATE VALVE FOR O.L.T.C PROTE. RELAY & AUX CONSE.	2
120	MAIN CONSERVATOR PIPES	5
125	GAS COLLECTING DEVICE FOR BUCHHOLZ RELAY	1
126	PRISMATIC OIL GAUGE FOR MAIN CONSERVATOR	1
126a	PRISMATIC OIL GAUGE FOR AUX. CONSERVATOR	1
153	CONSERVATOR SUPPORT	2
161	BUCHHOLZ GAS RELEASE DEVICE PIPE	1
164	BREATHER PIPE	1
206	MONOGRAM	1
	COOLING SYSTEM	
003b	LIFTING LUG FOR RADIATORS /HEADERS	40
004a	EARTHING ARRGT. ON 'A' FRAME & FAN SUPPORT	14
014a	DRAIN / FILTER GATE VALVE 50 NB FOR COOLING SYSTEM	3
018a	THERMOMETERS ON COOLING SYSTEM	7
060	RADIATORS (2 X 500 RADIATOR BANK)	16
063	FANS 24" WITH MESH GUARD (4 RUNING + 1 STANDBY PER BANK)	10
067	EXPANSION JOINT 150 NB	4
070	FAN SUPPORT	10
072	'A' FRAME SUPPORT	4
072a	PIPE SUPPORT	9
073	TOP HEADER	2
074	BOTTOM HEADER	2
086a	AIR RELEASE PLUG 3/4" BSP FOR RADIATORS , PIPEWORK & HEADER	23
114b	DRAIN PLUG 3/4" BSP FOR RADIATORS , HEADER & PIPE WORK	22
190	TOP OIL PIPE (RADIATOR BANK) 200 NB	1
196	BOTTOM PIPE (RADIATOR BANK) 150 NB	2
123	B/F VALVE 150 NB	4
203	RADIATORS B/F VALVE 80 NB	32
006	H.V LINE BUSHING (420 KV, 1250 A)	3
006a	H. V NEUTRAL BUSHING (36 KV,2000 A)	1
007a	L. V BUSHING (17.5 KV, 5000 A)	6
007b	L. V NEUTRAL BUSHING (17.5 KV, 5000 A)	2
77	RAD. TIE BAR	24

ITEMS	DESCRIPTION	QTY
	TRANSFORMER	
002	RATING & DIAGRAM PLATE	1
002a	VALVE SCHEDULE PLATE	1
002b	OIL FILLING INSTRUCTION PLATE	1
002c	INSTRUCTION PLATE FOR DO'S AND DONT'S OF TRANSFORMER	1
003	LIFTING BOLLARD (FOR TRFR WITH OIL)	4
004	EARTHING TERMINAL	2
008	NAME PLATE HINDI AND ENGLISH (ONE EACH)	2
009	INSTRUCTION PLATE FOR LIFTING CAPACITY OF BOLLARD	4
010	INSPECTION COVER ON TANK AND TANK COVER	3
013	DRAIN PLUG 1" BSP ON BOTTOM TANK	2
014	DRAIN BUTTERFLY VALVE FOR TOTAL DRAINAGE DIA 100	1
018	POCKET FOR OIL TEMPERATURE INDICATOR	1
018a	POCKET FOR WINDING TEMPERATURE INDICATOR	3
018b	ORDINARY THERMOMETER WITH POCKET	1
018c	RESISTANCE TEMPERATURE DETECTOR WITH POCKET	4
019	JACKING PAD (SUITABLE FOR TOTAL WEIGHT WITH OIL)	4
021	OIL TEMPERATURE INDICATOR	1
022	WINDING TEMPERATURE INDICATOR	3
023	TWIN-BI-DIRECTIONAL ROLLERS DIA 320	4
024	SKIDS	1
025	FILTER 50 NB GATE VALVE BOTTOM	1
025a	FILTER 50 NB GATE VALVE TOP	1
027	PRESSURE RELIEF VALVE (SUKRUT MAKE) WITH DRAINAGE ARRGT.	2
034	COOLER CONTROL CABINET	1
040	WAGON ANCHORING LUGS	4
079	LADDER WITH LOCKING DEVICE	1
080	OIL INLET BUTTER FLY VALVE (150NB)	2
081	OIL OUTLET BUTTER FLY VALVE (200NB)	1
085	15 NB SAMPLING VALVE (TOP TANK-IND+BOTTOM TANK-IND)	2
086	AIR RELEASE VALVE (1/2"BSP) ON TANK COVER	1
109	HAULAGE LUG LONGITUDINAL	4
115	END FRAME TO COVER LOCKING ARRGT.	2
116	EARTHING CONNECTIONS TOP TANK TO BOTTOM TANK	2
157	H. V. NEUTRAL GROUNDING ARRGT.	1
181	POST INSULATOR 36 KV	3
212	EARTHING CONNECTION CORE & ENDFRAME TO TANK	1
213	ROLLER LOCKING ARRANGEMENT WITH NUT BOLTS & WASHERS etc	4
214a	EARTHING CONNEC. FOR HV,LV,HVN,LVIN,LVZN TURRET & OLTC FLANGE ON LOAD TAP CHANGER (OLTC)	9
041	BEVEL GEAR BOX	1
048	OLTC DRIVING UNIT	1
049	OLTC DRIVING GEAR HANDLE	1
050	OLTC	1
050a	HORIZONTAL SHAFT	1
050b	VERTICAL SHAFT	1
052	O. L. T. C. PROTECTIVE RELAY	1

ADDITIONAL INFORMATION W.O. 71289A19800	TYPE OF PRODUCT OR NAME OF CUSTOMER/PROJECT	84 MVA 400/6.9-6.9 KV 3-PHASE ONAN/ONAF COOLED STATION TRANSFORMER M/S:- TSGENCO (4X270 MW MANUGURU TPS)					
STATUS OF DRAWING U	BHARAT HEAVY ELECTRICALS LTD. JHANSI	DRN MSC	NAME	SIGN	DATE	NO. OF VAR	
DISTRIBUTION OF PRINTS TRE-1, TRP-1, BAY1&2-2, BAY9-4,		CHD				–	
		APPD RKM			30.03.16		
	DEPT TRE CODE 406	GRADE OF UN TOL DIM BWMT	SCALE --	WEIGHT (KG) –	REF. TO ASSY. NO.	ITEM NO –	NO. OF ITEM –
	TITLE OGA PART LIST			CARD CODE	DRAWING NO. 3 460 00 50 349		REV. 01
					SHEET NO. 04	NO. OF SHEETS 04	

SIZE A3